Stellaris® MDL-BDC24 Brushed DC Motor Control Module

Getting Started Guide

Copyright © 2009–2011 Texas Instruments

Copyright

Copyright © 2009–2011 Texas Instruments, Inc. All rights reserved. Stellaris and StellarisWare are registered trademarks of Texas Instruments. ARM and Thumb are registered trademarks, and Cortex is a trademark of ARM Limited. Other names and brands may be claimed as the property of others.

Texas Instruments
108 Wild Basin, Suite 350
Austin, TX 78746
http://www.ti.com/stellaris

Table of Contents

Chapter 1: Introduction to Jaguar **5**
Features 7
Differences between the MDL-BDC and MDL-BDC24 8
Warnings 8
Chapter 2: General Operation **9**
Operating Modes 10
Fault Conditions 10
Coast/Brake Jumper 11
Power and Motor Wiring 11
Chapter 3: Servo/PWM-based Control **13**
Servo-style PWM Speed Control Input 13
Calibrating the PWM Input 13
Chapter 4: Introduction to Network-Based Control **15**
Network Security and System Safety 15
Trusted Mode (FIRST Robotics Competition feature) 15
Chapter 5: Operation using the RS232 Interface **17**
BDC-COMM Application Overview 17
Chapter 6: Firmware Update Using BDC-COMM **19**
Important Information 19
Step 1: Hardware Setup 19
Step 2: Run BDC-COMM 20
Step 3: Assign Unique CAN ID 20
Step 4: Update Firmware 20
Chapter 7: Closed-Loop Control Options **21**
Wiring 21
Constant Current Control 22
Position Control using an Encoder 22
Position Control Using a Potentiometer 23
Speed Control 23
Chapter 8: Operation Using the CAN Interface **25**
CAN Overview 25
CAN IDs 25
CAN Network 25
Control Options for Networked Jaguar Modules 26
Appendix A: Jaguar Communication Cables **29**
CAN Terminator 29
CAN Cable 29
CAN Cable Assembly 30
CAN Cable Pin Assignments 30
RS232 Cable 30
RS232 Cable Assembly 30
RS232 Cable Pin Assignments 31
External References 31

C H A P T E R 1

Introduction to Jaguar

Texas Instruments presents the next generation FIRST Robotics Competition (FRC) motor controller: the MDL-BDC24 brushed DC motor control (also known as Black Jaguar). The MDL-BDC24 builds on the success of the first-generation MDL-BDC (Gray Jaguar) by adding an RS232-to-CAN gateway and enhanced electrical performance. Designed specifically for the FRC competition, the MDL-BDC and MDL-BDC24 modules facilitate the design of complex robots within the short six-week FRC build period.

This document provides a complete description of how to use Jaguar in both Networked and Servo control modes. Information applies to both the MDL-BDC and MDL-BDC24 models except where noted. Additional information can be found in the MDL-BDC and MDL-BDC24 data sheets, as well as in related application notes.

Figure 1-1. Next Generation Brushed DC Motor Control Module, MDL-BDC24

The flowchart in Figure 1-2 provides an overview of the process of developing with the MDL-BDC and MDL-BDC24 modules. We suggest checking off each step as it is completed.

Figure 1-2. MDL-BDC24 Development Process

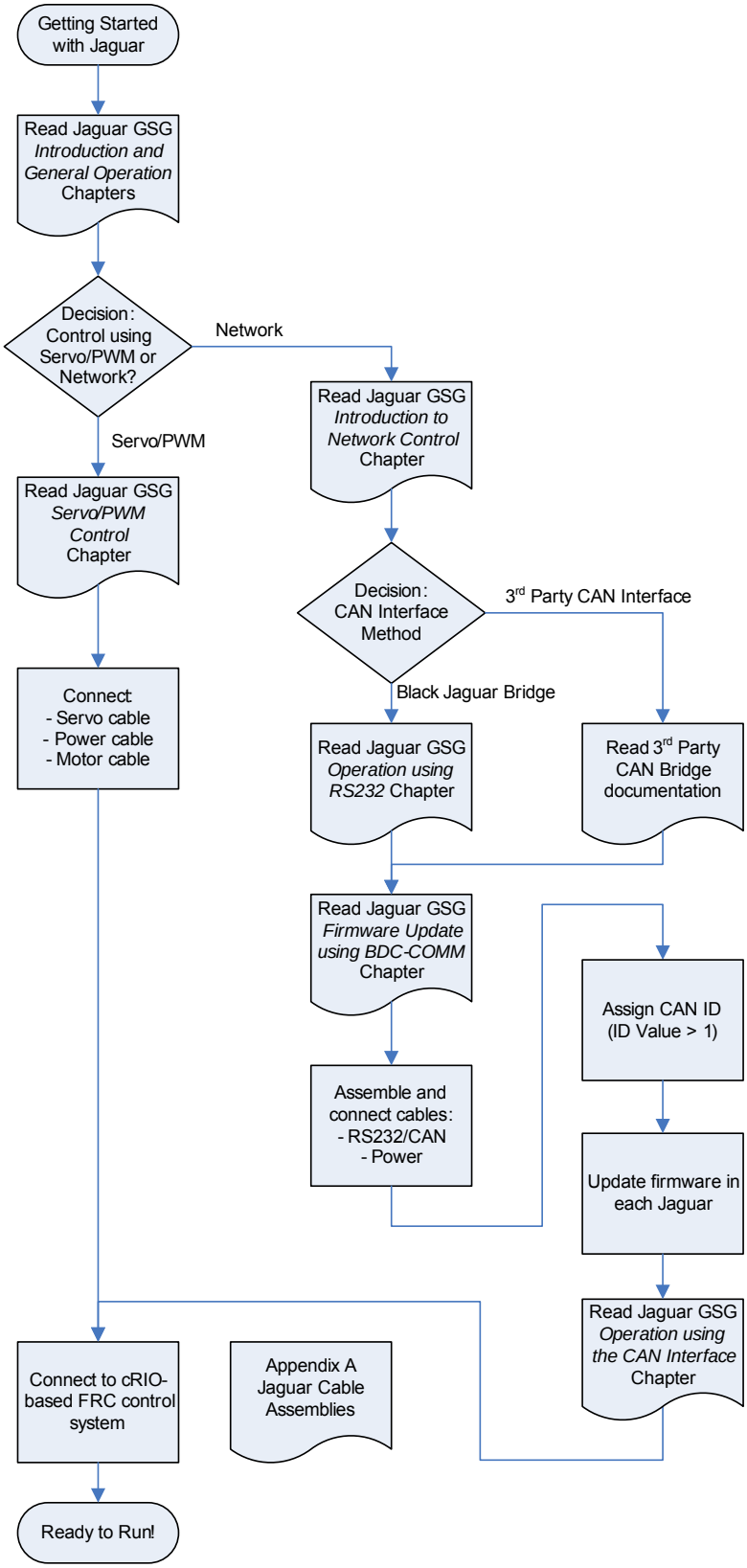

Features

The Stellaris® Brushed DC Motor Control Module with CAN (MDL-BDC24) offers a variable speed control for 12 V and 24 V brushed DC motors at up to 40 A continuous current. The motor control module includes high performance Controller Area Network (CAN) connectivity and a rich set of control options and sensor interfaces, including analog and quadrature encoder interfaces. The high-frequency PWM on the MDL-BDC24 enables DC motors to run smoothly and quietly over a wide speed range. The module uses highly optimized software and a powerful 32-bit Stellaris® microcontroller to implement open-loop speed control as well as closed-loop control of speed, position, or motor current.

The MDL-BDC24 provides the following features:

- Quiet control of brushed DC motors
  - 15 kHz PWM frequency
- Three options for Speed control
  - Industry-standard R-C servo type (PWM) interface
  - Controller Area Network (CAN) interface
  - RS232 serial interface
- CAN communication
  - Multicast shared serial bus for connecting systems in electromagnetically noisy environments
  - 1M bits/s bit rate
  - CAN protocol version 2.0 B
  - Full configurability of module options
  - Real-time monitoring of current, voltage, speed, and other parameters
  - Firmware update
- RS232 serial communication
  - Bridges RS232 port to a CAN network
  - Directly interfaces to a PC serial port or National Instruments cRIO
- Status LED indicates Run, Direction, and Fault conditions
- Motor brake/coast selector
- Limit switch inputs for forward and reverse directions
- Quadrature encoder input (QEI)
  - Index input
  - 5 V supply output to encoder
- Analog input
  - Accepts 10 kΩ potentiometer or 0-3 V input
- Screw terminals for all power wiring
- Headers (0.1 inch pitch) for all control signals

Differences between the MDL-BDC and MDL-BDC24

First generation Jaguar motor controls (MDL-BDC) have similar capabilities to the second generation Jaguar (MDL-BDC24). Functional differences are summarized in Table 1-1.

Table 1-1. MDL-BDC and MDL-BDC24 Differences

Feature	MDL-BDC (Gray)	MDL-BDC24 (Black)
Part Number	MDL-BDC	MDL-BDC24
Voltage Range	6–13 V	6–30 V
RS232C Port	No	Yes
Terminal Screws	Captive – Do not remove[a]	Loose – Okay to remove[b]

a. Captive terminal screws should not be removed because metal debris can be created.
b. Non-captive screws are safe to remove and are compatible with ring-terminal use.

Internally, the MDL-BDC24 is a completely new design that makes use of switching converters and synchronous rectification to improve overall energy efficiency.

Software should be updated to the latest version to ensure that all capabilities of the MDL-BDC or MDL-BDC24 module are enabled and functional.

Warnings

WARNING – Be aware of the following warnings. Failure to heed warnings can result in damage to the module or invalidation of the module warranty.

- Mount the Jaguar module so that the vents in the top and sides of the unit are not restricted in any way. Maintain a clearance of at least ½ inch between modules.
- Reverse wiring is unprotected; doing so voids the Jaguar module's warranty.
- Do not exceed the absolute maximum supply voltage (30 V_{DC} for MDL-BDC24, 13 V for MDL-BDC). Doing so causes permanent damage to the module.
- Protect Jaguar from all situations where debris could enter through ventilation slots or connector openings.

General Operation

This chapter describes the general operation of the MDL-BDC24 motor control module. Figure 2-1 shows the key features of the MDL-BDC24 motor control. Table 2-1 provides a key to the status LED.

Figure 2-1. MDL-BDC24 Key Features

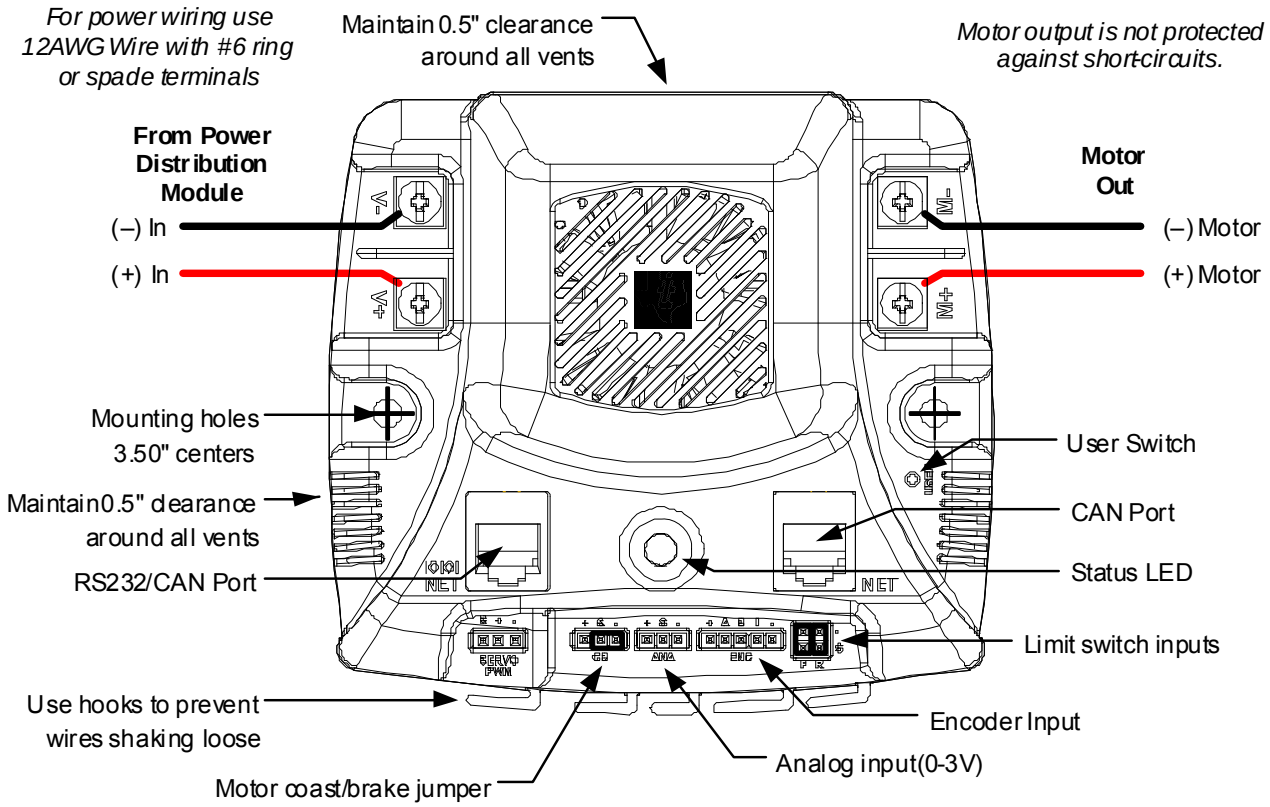

Table 2-2. Status LED

LED State	Module Status
Normal Operating Conditions	
Solid Yellow	Neutral (speed set to 0)
Fast Flashing Green	Forward
Fast Flashing Red	Reverse
Solid Green	Full-speed forward
Solid Red	Full-speed reverse
Fault Conditions	
Slow Flashing Yellow	Loss of servo or Network link
Fast Flashing Yellow	Invalid CAN ID

Table 2-2. Status LED (Continued)

LED State	Module Status
Slow Flashing Red	Fault condition
Calibration Conditions	
Fast Flashing Red and Green	Calibration mode active
Fast Flashing Red and Yellow	Calibration mode failure
Fast Flashing Green and Yellow	Calibration mode success
Slow Flashing Red and Green	Calibration mode reset to factory default settings success

Operating Modes

The MDL-BDC24 can be controlled using either the Servo-style PWM Input or the CAN interface. Table 2-3 compares the capabilities of each control method.

Table 2-4. Control Method Comparison

	Control Method	
	Servo-Style PWM input	**CAN/RS232C Interface**
Speed Control	Yes	Yes
Analog Position Control	No	Yes
Encoder Position Control	No	Yes
Configurable Parameters	No	Yes
Voltage, Current Measurement	No	Yes
Limit Switches	Yes	Yes
Coast/Brake Feature	Yes	Yes[a]
Firmware Update	No	Yes

a. By default, the jumper sets coast/brake. Network commands can over-ride the jumper setting.

Jaguar supports the simultaneous use of CAN for monitoring and the Servo-style input for speed.

Fault Conditions

A slow flashing Red LED indicates that the MDL-BDC24 detected one of the following fault conditions:

- Power supply under-voltage
- Over temperature
- Over current
- Limit switch activated in the current direction of motion

When a fault condition occurs, the motor shuts down and the LED indicates a fault state during the fault condition and for 3 seconds after the fault cause is cleared (except for the limit switch fault,

which is cleared instantly). A slow flashing Yellow LED indicates that the MDL-BDC24 is not receiving a valid control signal.

Coast/Brake Jumper

The coast/brake signal controls the dynamics of the drive signal to the motor. When set to brake, the MDL-BDC24 is able to achieve greater deceleration and holding torque because it decays regenerative current from the motor.

The coast/brake signal can be set with a jumper or controlled by a signal from a digital source. A single wire connected to the center (S) pin, is recommended. Do not connect to the + pin (+3.3 V) of this connector as any mis-wiring could damage the MDL-BDC24.

The coast/brake jumper setting can be overwritten when using the CAN/RS232 interface.

Power and Motor Wiring

The Overview diagram (Figure 1-2 on page 6) shows motor and power connections to the MDL-BDC24. For power wiring, use 10-12 AWG wire terminated with #6 ring or spade terminals. The control is not protected against reverse polarity or short-circuits.

Servo/PWM-based Control

The MDL-BDC and MDL-BDC24 both support speed and direction control through a servo-style PWM input. Figure 3-1 shows the servo-wiring details.

Figure 3-1. Wiring for Servo-style PWM Control

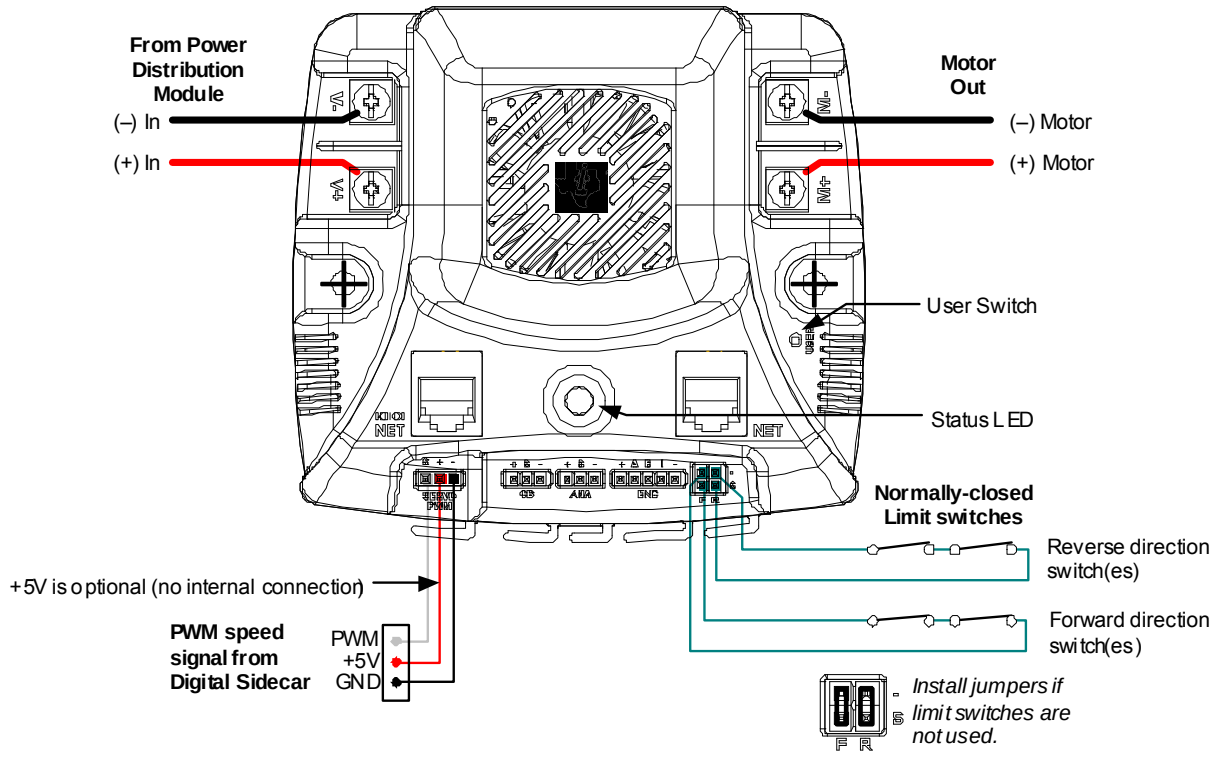

Servo-style PWM Speed Control Input

The servo PWM input controls motor speed and direction. The digital signal must meet the timing and voltage requirements listed in the MDL-BDC24 specifications. The center pin (+) has no internal connection. Because the signal is optically isolated, both the signal (S) and GND (-) pins must be connected to the signal source.

The servo-style PWM input is optically isolated. All other control inputs are non-isolated and are referenced to the power supply (-).

Calibrating the PWM Input

To accommodate variation in the timing of the supplied signal, Jaguar has a calibrate feature that sets new values for full-forward, full-reverse and points in between. Calibration is normally only required in applications where the PWM source has uncertainties due to analog radio links or other variables. Direct digital sources are unlikely to require calibration.

To calibrate the servo-style PWM input for a specific range, connect a PWM source, then:

1. Hold down the USER switch with a straightened paperclip for 5 seconds.
2. The LED flashes Red and Green to indicate Calibration mode.
3. Instruct the controller to send a full-forward signal for one or more seconds.
4. Instruct the controller to send a full-reverse signal for one or more seconds.
5. The LED flashes Green and Yellow quickly to indicate a successful calibration.

The MDL-BDC24 samples these signals and centers the speed range and neutral position between these limits. A calibration failure signals if an out-of-range signal is detected. This condition is indicated by flashing the LED Red and Yellow.

CHAPTER 4

Introduction to Network-Based Control

Both MDL-BDC and MDL-BDC24 support CAN-based control, configuration and firmware updates. MDL-BDC24 also supports the same command set over RS232.

Network Security and System Safety

The factory default network protocol allows for very flexible control networks with all commands being accepted and executed without restriction. However, a vulnerability is that faulty software has the potential to send errant messages. To address the possibility that motors could run when they are not supposed to, a special set of trusted commands have been added. This capability is supported in an FRC-specific firmware update. All MDL-BDC and MDL-BDC24 modules must have updated firmware if they are to be used with CAN or RS232 communication in an FRC competition.

Trusted Mode (FIRST Robotics Competition feature)

Each MDL-BDC and MDL-BDC24 module expects to see a trusted message from the Host every 100 ms. If a trusted message is not received, the MDL-BDC and MDL-BDC24 module shut down the motor output until trusted communication is restored.

Trusted communication relies on a proprietary protocol that defines a dynamic message token, known only to the host driver and a specific MDL-BDC or MDL-BDC24 module.

Non-FIRST users should use the factory-default firmware (available in source form) which does not implement trusted communication.

C H A P T E R 5

Operation using the RS232 Interface

The MDL-BDC24 supports a full set of network control and configuration functions over a standard RS232C serial interface. The command protocol is essentially the same as the protocol used on the CAN interface allowing the MDL-BDC24 to automatically bridge all commands between the RS232 and CAN interfaces.

RS232 signals are implemented on the left-side NET connector, which has a special IOIOI annotation as shown in Figure 5-1.

Figure 5-1. MDL-BDC24 Bridges for RS232 to CAN

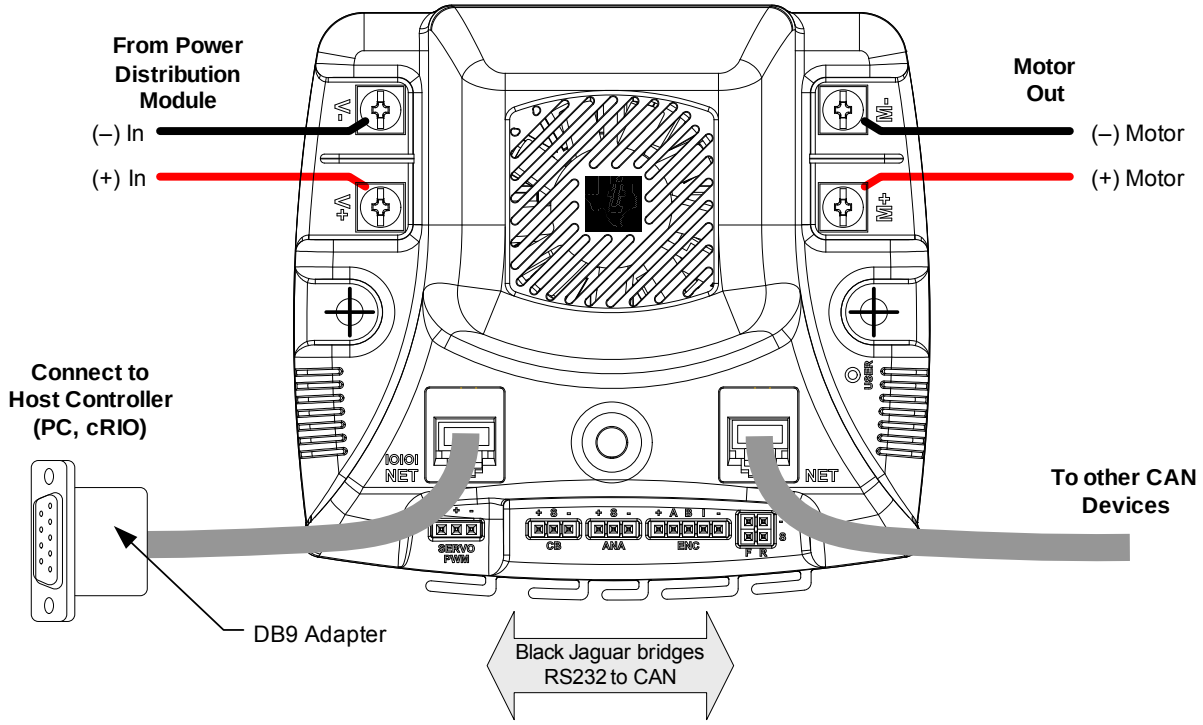

See Appendix A, “Jaguar Communication Cables,” on page 29 for details of the RS232 cable assembly. The recommended DB9 adapter design contains an integrated CAN terminator.

BDC-COMM Application Overview

BDC-COMM is a Windows application for configuring and controlling a Jaguar network using a PC’s RS232 serial port. It is also a convenient tool for performing firmware updates. BDC-COMM requires the use of an MDL-BDC24 to bridge RS232 to CAN. Figure 5-2 on page 18 shows the main GUI window of the BDC-COMM application.

Figure 5-2. BDC-COMM GUI Main Window

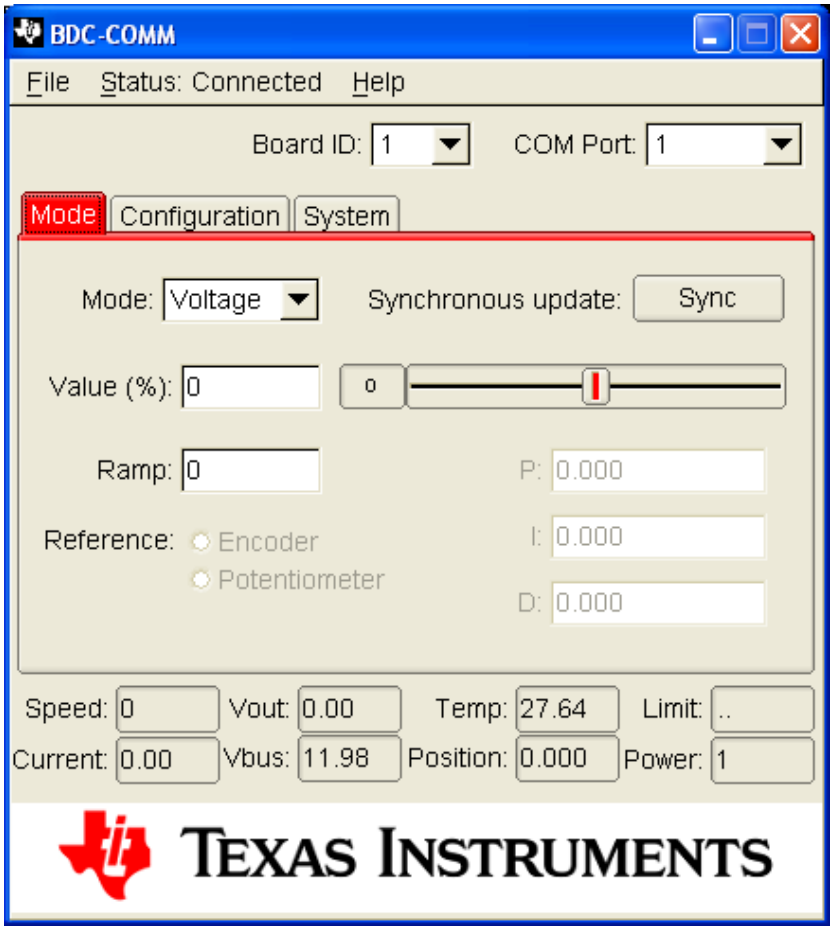

C H A P T E R 6

Firmware Update Using BDC-COMM

Firmware update capability allows Texas Instruments to provide new software, in binary format, that contains feature enhancements and bug fixes.

Special firmware releases have been created for FRC 2010. Both MDL-BDC and MDL-BDC24 have firmware updates available. This firmware update must be installed prior to using RS232 or CAN-based control. Firmware update is optional for Servo/PWM control.

Firmware update requires RS232 and CAN cables, at least one MDL-BDC24, the binary file, a PC with an RS232 port, and a 12 V power source.

The *BDC-COMM Application User's Guide* contains additional detail on using the tool for firmware update as well as other configuration and control functions.

Important Information

Observe the following precautions when updating firmware:

- We strongly recommend connecting only one Jaguar to the network at a time. The exception is when updating a single first generation (MDL-BDC) Jaguar. To update an MDL-BDC Jaguar, add only theMDL-BDC24 that is being used as the RS232-to-CAN bridge.
- Use the correct binary file. For first generation MDL-BDC modules, the file is named QS-BDC.bin. For second generation MDL-BDC24 modules (black), the file is named QS-BDC24.bin

Step 1: Hardware Setup

- Connect an MDL-BDC24 (black) to a PC following the information in Chapter 5, "Operation using the RS232 Interface" on page 17.
- If a first-generation (MDL-BDC) Jaguar (gray) requires firmware update, then connect it to the MDL-BDC24 (see Figure 6-1).
- Apply power. The LED on the Jaguar(s) flash yellow indicating loss-of-link.

Figure 6-1. Valid Configurations for Firmware Update

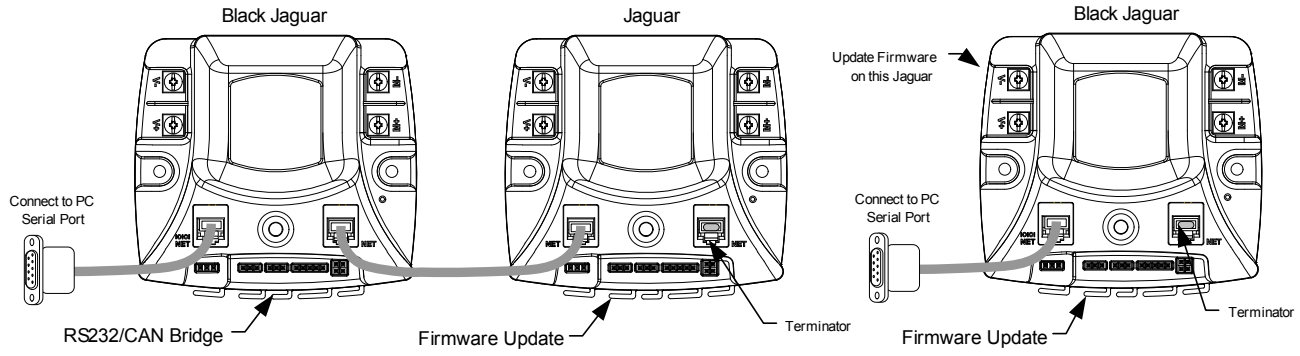

Step 2: Run BDC-COMM

- Run BDC-COMM.EXE.
- The LED on the Jaguar(s) should now be solid yellow indicating a valid network link. If the LED is not solid yellow, check all network connections as well as the BDC-COMM Com Port setting.
- A valid link must be established before proceeding to the next step.

Step 3: Assign Unique CAN ID

- If two modules are connected, each must have a unique CAN ID. The factory default CAN ID is 1.
- Assign the Jaguar modules the ID > 1 so that new Jaguar modules from the factory do not operate on your robot.
- Using the BDC-COMM application, select the System tab and enter a new ID (a unique number from 2..63).
- Click “Assign.” The LED on the module(s) starts flashing green.
- Press the USER button on the module that is to receive the new ID. This must be done within 5 seconds or the operation times out.
- The module’s LED blinks the number of times that corresponds to the ID if assignment was successful (for example, if you assign the unique ID number of 5, the LED blinks five times).
- A fast-flashing yellow LED indicates an invalid CAN ID. This can occur if an attempt is made to reassign an ID that is already in use.

Step 4: Update Firmware

- A valid link must be established before proceeding. Ensure that the LED indicates solid yellow. It might be necessary to reconnect to the CAN network to synchronize the trusted link.
- Select the board ID that you want to update using the “Board ID” menu.
- Select File > Update Firmware from the top menu bar.
- Browse to locate the appropriate binary file:
  - The MDL-BDC24 (black) uses the qs-bdc24.bin file.
  - The MDL-BDC (gray) uses the qs-bdc.bin file.
- Click OK and then click Update.
- A progress bar displays the firmware update progress.
- When the firmware update completes, reconnect bdc-comm to the network to re-establish a link.

The System tab in BDC-COMM displays the firmware version.

CHAPTER 7

Closed-Loop Control Options

A network-controlled Jaguar supports several types of closed-loop control through an internal PID controller.

- Constant-current control
- Position control using an encoder
- Position control using a potentiometer
- Speed control

Only one mode can be used at a time.

For each control mode, refer to API, VI, or tool documentation for information on which commands to use for configuration.

Wiring

All closed-loop mode, except for constant-current control, require an external sensor. Figure 7-1 shows an advanced wiring configuration using the CAN interface. The diagram shows wiring for position sensing using both a position potentiometer and a quadrature encoder. Although two sensor types are shown, the MDL-BDC software supports control and monitoring of only one sensor at a time.

Figure 7-1. Advanced Wiring Diagram

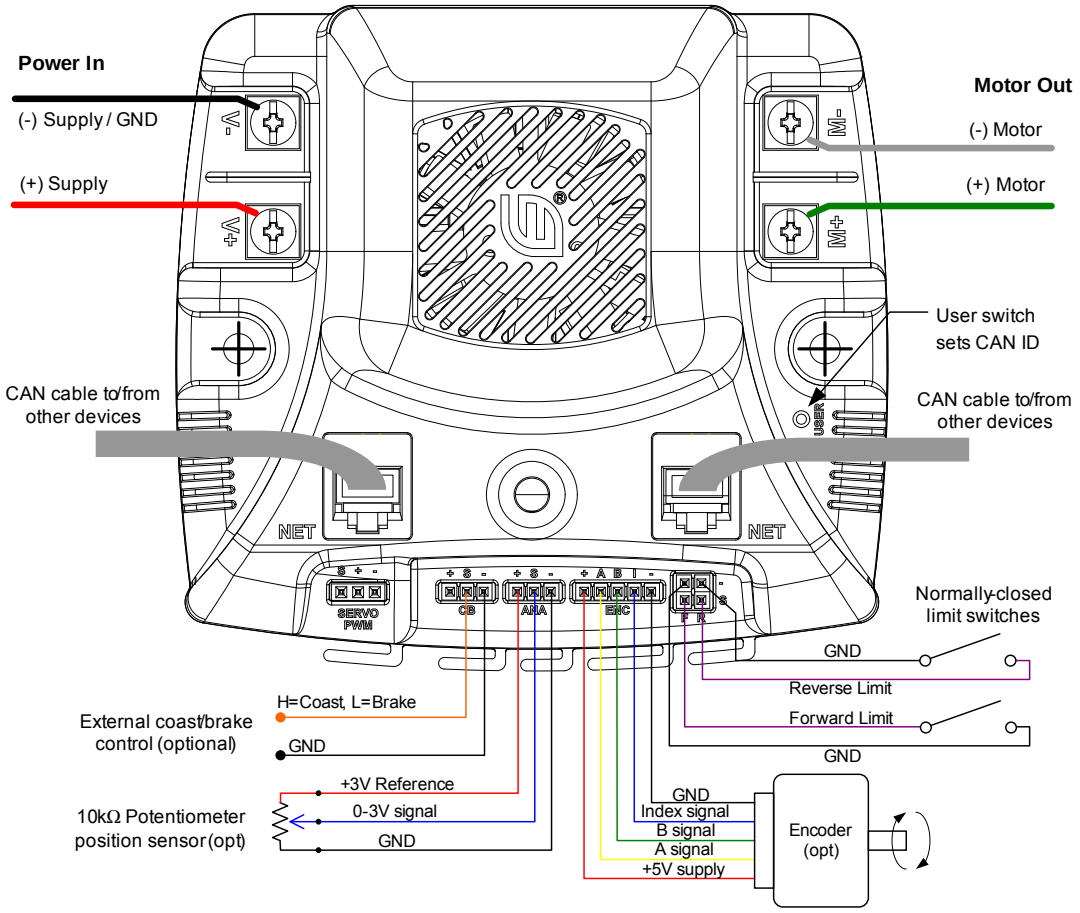

Constant Current Control

The MDL-BDC and MDL-BDC24 modules default to voltage control, but in some applications current (ampere) control is a more useful parameter. In this mode, the MDL-BDC and MDL-BDC24's internal current sensor is used to complete a constant-current control loop. The capabilities of this mode are a function of the motor's parameters and the electrical specification for the module as listed in the data sheet. A small DC motor might not be suitable for use with the Jaguar's constant-current mode.

No additional wiring is needed for constant current control.

Position Control using an Encoder

In position control mode, the MDL-BDC and MDL-BDC24 modules accept position commands over the network, and then use an internal PID controller to autonomously move the motor to the specified position.

The QEI software position count changes on each pulse of the Encoder A input. For example, a 360° movement of a 100 pulse-per-revolution (PPR) encoder results in a 100-count change in the position value. PPR is sometimes referred to as the number of lines that an encoder has.

The relationship between the Encoder B input and the Encoder A input determines whether the position counter increments or decrements.

An edge on the Index (“I”) input resets the position counter to zero.

The MDL-BDC and MDL-BDC24 modules support a wide range of shaft encoders. Encoder electrical parameters are detailed in the corresponding data sheets.

If the P, I and D parameters are positive (or zero), the MDL-BDC and MDL-BDC24 modules expect that a forward condition (+ voltage on White terminal, - voltage on Green) generates increasing counts on the encoder interface. Increasing counts occur when the rising (or falling) edge of the A input leads the rising (or falling) edge of the B input.

If the P, I and D parameters are negative (or zero), the MDL-BDC and MDL-BDC24 modules expect that a forward condition (+ voltage on White terminal, - voltage on Green) generates decreasing counts on the encoder interface. Decreasing counts occur when the rising (or falling) edge of the B input leads the rising (or falling) edge of the A input.

See Figure 7-1 on page 22 for wiring information. For reliable operation, keep encoder wiring short and route it away from noise sources. The encoder inputs are not electrically isolated.

Position Control Using a Potentiometer

Position control can also be implemented with a single or multi-turn potentiometer. Potentiometers with continuous rotation are not supported.

The MDL-BDC and MDL-BDC24 modules contain a built-in bias pin for use with 10 kΩ potentiometers. If another potentiometer value or analog source is used, it must have a 0-3 V range.

If the P, I and D parameters are positive (or zero), Jaguar expects that a forward condition (+ voltage on White terminal, - voltage on Green) generates an increasing voltage on the analog input.

If the P, I and D parameters are positive (or zero), Jaguar expects that a forward condition (+ voltage on White terminal, - voltage on Green) generates a decreasing voltage on the analog input.

The analog input is not electrically isolated.

Speed Control

Speed control can be implemented with either an encoder or with a simple tachometer sensor. If a tachometer sensor is used (such as a gear-tooth sensor), then the signal should be connected to the Encoder ‘A’ input signal, with the ‘B’ and ‘I’ input left unconnected.

The speed set-point is defined in revolutions per second. Adjust the encoder-lines parameter if the sensor generates more than one pulse per revolution.

CHAPTER 8

Operation Using the CAN Interface

CAN Overview

Controller Area Network (CAN) provides a powerful interface for controlling one or more Jaguar modules. Jaguar has a 6P6C socket and a 6P4C socket for daisy-chaining modules using standard cables. Each end of the CAN network should be terminated with a 100Ω resistor.

The CAN protocol used by Jaguar includes the following capabilities:

- Firmware update over CAN
- Read supply voltage, motor voltage, temperature and current
- Set and read motor voltage or target position
- Set control mode to speed or position
- Configure parameters
- Enable features such as closed-loop speed and position control.
- Trusted communication with keep-alive commands for fail-safe operation

CAN IDs

Each MDL-BDC24 module on the CAN bus is accessed using an assigned ID number. The ID defaults to 1, but should be changed to a unique value from 2 to 63 by following the ID Assignment procedure. The procedure is detailed in Step 3 of the firmware update procedure in Chapter 6, “Firmware Update Using BDC-COMM”, page 19.

At the network protocol level, ID assignment involves the following:

1. The Host sends Assign ID + *number* command to all Jaguar modules.
2. Pressing the USER switch on an MDL-BDC24 informs that particular module to accept the previously specified *ID number* and save it to non-volatile memory. The operation times out if a switch is not pressed within 5 seconds.
3. The Jaguar with the new ID assignment sends out a message to let all Jaguar modules know that the ID assignment is complete. Normal operation resumes.

CAN Network

A CAN network consists of one or more Jaguar modules, an interface or bridge, and a host controller. Figure 8-1 shows a typical configuration.

Figure 8-1. CAN Network Topology

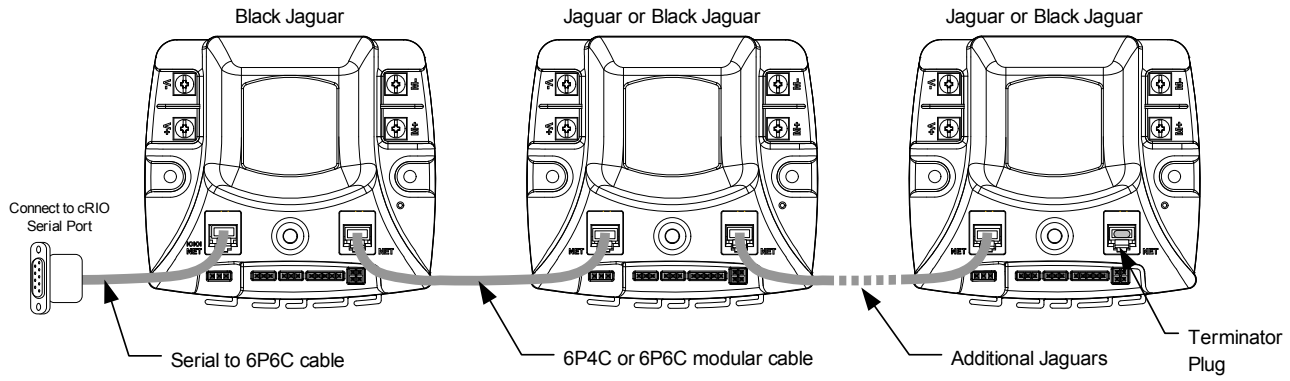

CAN cabling follows a daisy-chained topology using modular cable. Table 8-1 lists network parameters.

Table 8-1. CAN Wiring Parameters

Parameter	Value	Notes
Maximum Nodes	16	A node is defined as a device on the CAN network. This includes all Jaguar modules and any device that sends and receives CAN messages. If you use the Black Jaguar as a bridge, all Jaguar modules (gray or black, including the Bridge) count as nodes, but the computer (or CRIO) does not since it is sending messages over the serial port.
Total Cable Length (maximum)	20 ft / 6.1m	Tip: Start with this length of bulk cable and cut all segments from it to ensure compliance.
Termination Resistance	100	At each end of the network.
Cable Type	4 or 6 conductor modular cable. 28 or 26 AWG.	

See Appendix A, “Jaguar Communication Cables,” on page 29 for cable and terminator assembly instructions.

Control Options for Networked Jaguar Modules

The Host controller on a Jaguar network requires a software driver to implement the CAN communication protocol. Protocol details are available from the RDK-BDC24 pages at www.luminarymicro.com/jaguar To simplify programming, National Instruments and Texas Instruments have created a range of tools to simplify Jaguar control.

The following Host tools/APIs/Virtual Instruments are available:

- BDC-COMM is a Windows application for configuring, testing, and performing firmware upgrades.

- LabView VI
- Java API
- C++ API
- Example source code for a host-based on a Stellaris Microcontroller can be found in StellarisWare® (\boards\rdk-bdc\bdc-ui) also available at www.luminarymicro.com/jaguar.

Jaguar Communication Cables

CAN Terminator

Because the CAN signals operate at high bit rates (1 MBPS), a terminator is required at each end of the network. A simple network might work with a single terminator, but this is not recommended for normal use. The termination resistor is also important for returning the CAN signaling levels to the recessive state when no nodes are transmitting. Figure A-1 shows the recommended terminator construction.

Figure A-1. CAN Terminator Plug

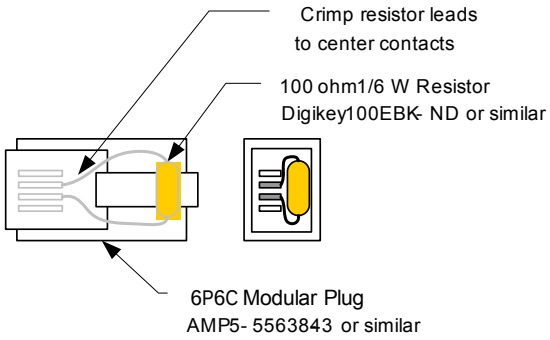

CAN Cable

Use CAN cables to daisy-chain the network between Jaguar modules. Standard off-the-shelf modular 6P6C cables can be used. Cables must be “straight-pinned,” which means Pin 1 > 1, Pin 2 > 2, and so on. This is also referred to as a reverse-cable because the tabs on the connectors are on the opposite sides of the cable. The CAN cable needs only 4 conductors, but it is acceptable to use a 6-conductor cable and plugs. A suitable 6-ft off-the-shelf 6P4C cable is Digikey Stock No. A2662R-07-ND.

Figure A-2 shows the materials needed to build custom-length CAN cables. Apart from a modular plug crimp tool, no special tools are required.

Figure A-2. Materials Needed to Assemble Custom-Length 6P4C Cable

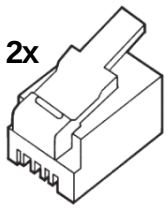

Modular plug for stranded flat - oval cable
AMP P/No. 5-641335
Digikey Stock No. A9092-ND

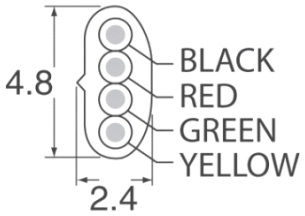

Modular cable – 4 conductor
Assmann Elect. AT-K-26-4-S/100-R
Digikey Stock No. A0043R-100-ND

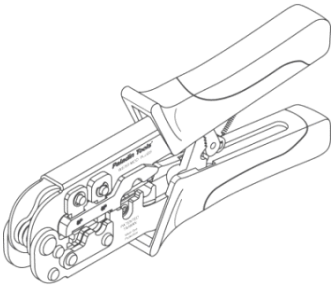

6P6C/6P4C Modular Plug Crimp Tool

CAN Cable Assembly

Follow these steps to complete cable assembly (shown in Figure A-3):

1. Cut modular cable to length
2. Use the crimp to strip the outer jacket from each end of the cable.
3. Insert wires into the modular plug and load into crimper.
4. Close crimper to complete the connections and secure the cable.

Figure A-3. Completed Cable Assembly

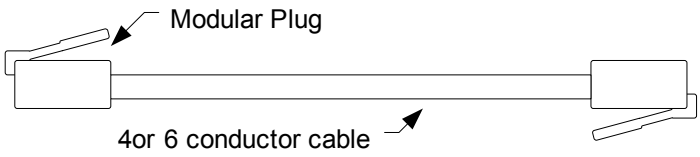

CAN Cable Pin Assignments

Plug	Wire Color	Jaguar Use
1	Black	-
2	Red	CAN H
3	Green	CAN L
4	Yellow	GND

RS232 Cable

Figure A-4 shows the materials needed to build the RS232 cable. Apart from a soldering-iron, no special tools are required.

Figure A-4. Materials Needed to Assemble RS232 Cable Components

RS232 Cable Assembly

Follow these steps to complete cable assembly (shown in Figure A-4):

1. Take the Modular Adapter and cut the black wire as short as possible. This wire is unused.
2. Cut off the terminals on the Red and Green wires. Strip then solder the Red and Green wires to the 100 resistor. Use a section of heat shrink to protect the resistor and solder connections.

3. Insert remaining terminals into the DB9 receptacle. Pin numbers are indicated on the plastic connector body.
   - White/Pin 3
   - Blue/Pin 2
   - Yellow/Pin 5
4. Slide the back-shell over the connector, then insert the modular cable to complete the assembly.

RS232 Cable Pin Assignments

6P6C	Wire Color	Jaguar Use	PC Use	DB9 Pin
1	White	RXD	TXD	3
2	Black	-	-	-
3	Red	CAN H	-	-
4	Green	CAN L	-	-
5	Yellow	GND	GND	5
6	Blue	TXD	RXD	2

External References

The following references are also useful for working with MDL-BDC24 module:

- The *MDL-BDC24 Data Sheet* contains detailed electrical specifications and connector details.
- The *BDC-COMM User's Guide* provides instructions on how to use the BDC-COMM GUI and command line applications to control Jaguar networks.
- MDL-BDC24 FAQ